PARTS FOR:
SPACE WARMER PROPANE HEATER 9,200-17,000Btu/hr
MODEL: **LP13.V2 & LP14**

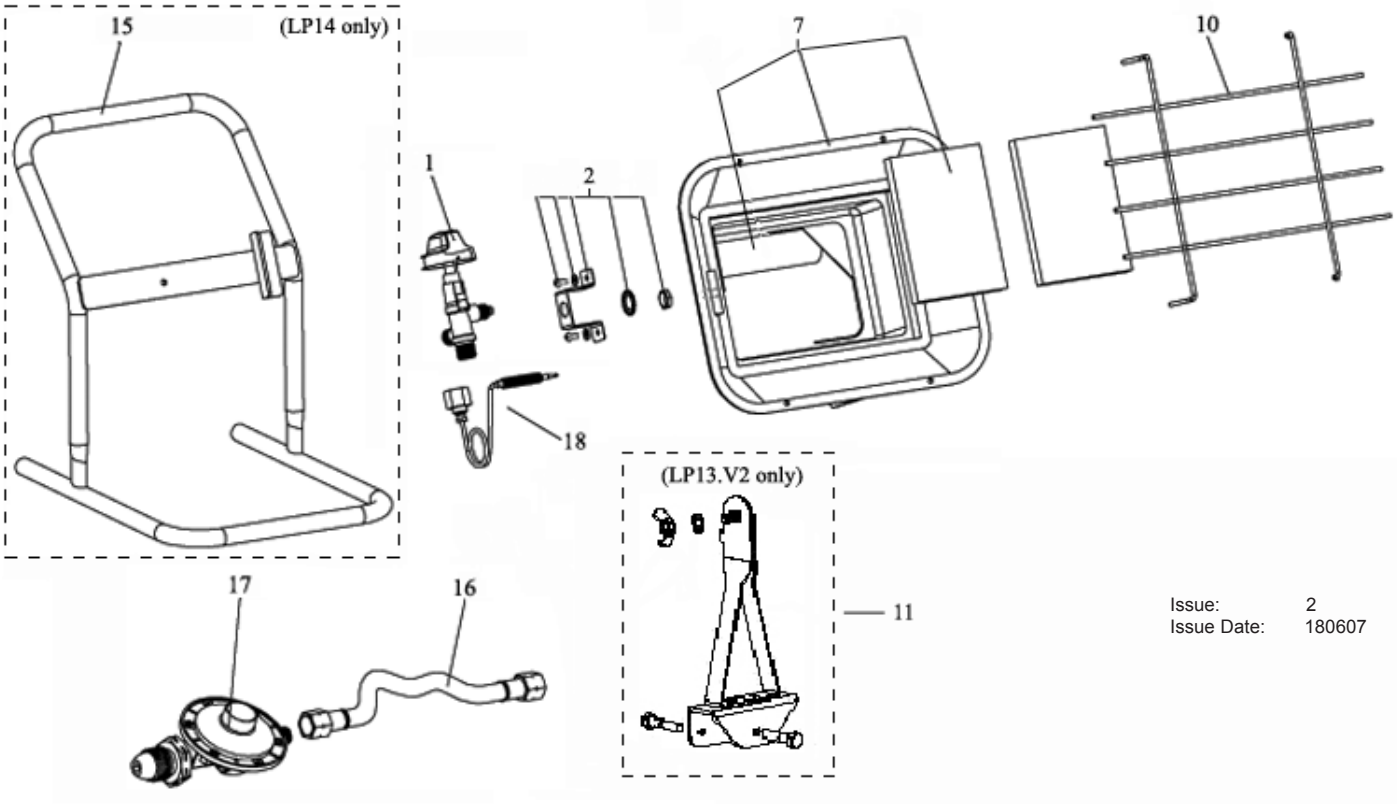

Issue: 2
Issue Date: 180607

LP13.V2

ITEM	PART NO	DESCRIPTION
1	LP13.V2-01	SAFETY VALVE ASS'Y
2	LP13.V2-02	NOZZLE HOLDER ASS'Y
7	LP13.V2-07	BURNER ASS'Y
10	LP13.V2-10	GRILL
11	LP13.V2-11	CYLINDER STAND ASS'Y
16	LP13.V2-16	GAS HOSE (700mm)
17	LP13.V2-17	REGULATOR
18	LP13.V2-18	THERMOCOUPLE

LP14

ITEM	PART NO	DESCRIPTION
1	LP13.V2-01	SAFETY VALVE ASS'Y
2	LP13.V2-02	NOZZLE HOLDER ASS'Y
7	LP13.V2-07	BURNER ASS'Y
10	LP13.V2-10	GRILL
15	LP14.15	STAND
16	LP14.16	GAS HOSE (1500mm)
17	LP13.V2-17	REGULATOR
18	LP13.V2-18	THERMOCOUPLE

NOTE: *It is our policy to continually improve products and as such we reserve the right to alter data, specifications and component parts without prior notice.*
IMPORTANT: No liability is accepted for incorrect use of product.
WARRANTY: Guarantee is 12 months from purchase date, proof of which will be required for any claim.
INFORMATION: For a copy of our latest catalogue and promotions call us on 01284 757525 and leave your full name and address, including postcode.

Sole UK Distributor
Sealey Group,
Bury St. Edmunds, Suffolk.
01284 757500
01284 703534
www.sealey.co.uk
sales@sealey.co.uk